Development and Design of the Ampex Auto Scan Tracking (AST) System

By R. A. HATHAWAY and RAY RAVIZZA

Several years ago Ampex recognized the need for a new generation of high-writing-speed, one-field-per-scan video recorders that would have low initial and operating costs, while offering a simple but effective internal editing facility. A program was also established to investigate the feasibility of improving the slow motion capability of such a recorder. Various systems were considered; however, a head that moved relative to the rotating portion of the scanner and, therefore, transverse to the recorded track on the tape was ultimately selected. Two approaches to physically moving the head transverse to the recorded track were considered in some detail. The approach decided upon uses a piezoelectric element onto which the head transducer is mounted. A bi-morph bender element configuration was found to be ideal. This type of system formed the basis for the development of the Auto Scan Tracking (AST) system used in the VPR-1 and VPR-2 professional one-inch helical recorders. Some of the engineering advances required for the system are discussed, including flexure longevity, flexure stability in a dynamic environment, and maintenance of head-to-tape contact at large deflections.

Development History

Several years ago Ampex recognized the need for a new generation of high-writing-speed, one-field-per-scan videotape recorders (VTRs) that would have low initial and operating costs as well as provide a simple but effective internal editing facility. At that time, the objectives seemed to be feasible because problems of precise tracking and tape handling had already been encountered in existing long track recorders marketed throughout the industry; these problems were thus more clearly understood and could be solved through advanced transport design, precision tooling, and tape development. To further expand the potential of this new concept VTR, a program was also established to investigate the feasibility of improving the slow motion capability of such a recorder, which up to this time included merely the ability to change tape speed and accept the cross tracking "noise bar" continually moving through the picture.

Various systems to achieve these new objectives were considered. Among these were: (1) multiple heads that were electrically switched at various points along the scan[1]; (2) moveable tape guides around the scanner that were repositioned during special effects playback in order to move the tape relative to the head; (3) scanner sections that contained the heads which axially moved during playback, thereby moving the head relative to the tape[2]; and (4) (the basis of the AST system) a head that moved relative to the rotating portion of the scanner and therefore the tape.

In order to minimize the loss of recorded video in a high-writing-speed helical scan system, with a single record head, the tape must wrap around the scanner as close to 360° as practical. Owing to the characteristics of the Omega wrap (see Ref. 3) and the relative position of the tape guides, as shown in Fig. 1, this loss of recorded video is about ten horizontal lines (635 μs in NTSC systems).

Consequently, the successful scan tracking system must be very responsive, and in nonstandard playback modes it must be able to reset itself well within that signal dropout time.

The transverse motion of the head relative to the tape during any of these nonstandard playback modes will resemble a sawtooth waveform. It follows the track at the 60-Hz scanning rate (as in NTSC) and is reset during the video information dropout time, which is positioned in the vertical interval so as to not disturb critical equalizing pulses or the vertical interval test signals (VITS).

In addition, as the track angle varies owing to continuing changes of playback tape speed, such as slow motion, the successful tracking system must *continuously* respond to these changes without adversely affecting the video picture. These criteria, from a practical standpoint, eliminate all of the aforementioned tracking systems, except system (4), in which the head motion is relative to the tape but independent of the scanner. However, selecting the means to achieve this is no simple matter.

Two methods for physically moving the head transverse to the recorded track were considered in some detail. One approach was to mount the head transducer on the free end of a thin cantilever beam that could be angularly displayed by electromagnetic forces created by small electrical coils placed on each side of the beam. This approach would involve several precision mechanical components and, owing to their mass and friction, would not have the fast response time required for a single head helical recorder.

The other approach was to use a piezoelectric element onto which the head transducer would be mounted. It was found that a bi-morph bender element configuration would be ideal because it has several desirable characteristics such as low mass, fast response, and large deflections; furthermore, depending on the length-to-width ratio it could be very rigid in directions other than the intended direction of deflection.

It was this type of system that was ultimately developed into the Ampex Auto Scan Tracking (AST) system used in the VPR-1 and VPR-2 professional one-inch helical recorders. The utilization of the bi-morph element for the playback head transducer prime mover was not without some concerns or problems. Structural stability and longevity were initial concerns; however, after a number of life tests involving dozens of elements it was found that the elements would maintain their original mechanical and electrical characteristics after being deflected ±0.010 in (±0.254 mm) in a cantilever configuration over 20 billion cycles.

In its actual applications, the element has to function predictably and without distortion in a dynamic environment with centrifugal forces approximately 1000 times the gravitational force (1000 g). Particular attention therefore had to be given to the method of mounting. In order to reveal as soon as possible any problems relating to the actual operating environment it was decided to build up a programmed, but open loop system and install it in an existing VTR. This plan was successfully accomplished on an Ampex VPR-5800 in 1974 and proved the fundamental feasibility of the system. This was only the beginning, however, because as the system gained sophistication a number of other problems surfaced, some of which are discussed below.

Head Mounting Structure

Figure 2 shows an exploded view of the AST head as used in the Ampex VPR-1 videotape recorder. Because this bi-morph element is driven by dc power sources of approximately ±200 V, it has to be insulated from its aluminum housing at all areas of potential contact; because of the 1000 g dynamic environment it must be securely fastened. Ceramic plates on each side of the element are sandwiched between the upper and lower housings. A central mounting screw passes through and holds together the various parts. This ar-

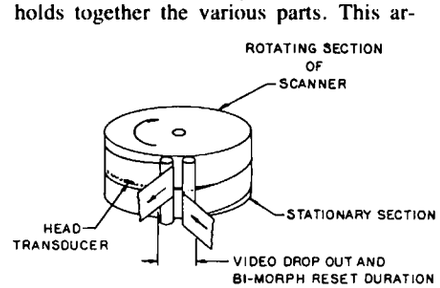

Fig. 1. Scanner assembly illustrating Omega wrap configuration.

Presented on 22 October 1979 at the Society's 121st Technical Conference in Los Angeles by R. A. Hathaway (who read the paper) and Ray Ravizza, Ampex Corp., 401 Broadway, Redwood City, CA 94063. This paper was received on 17 October 1979.

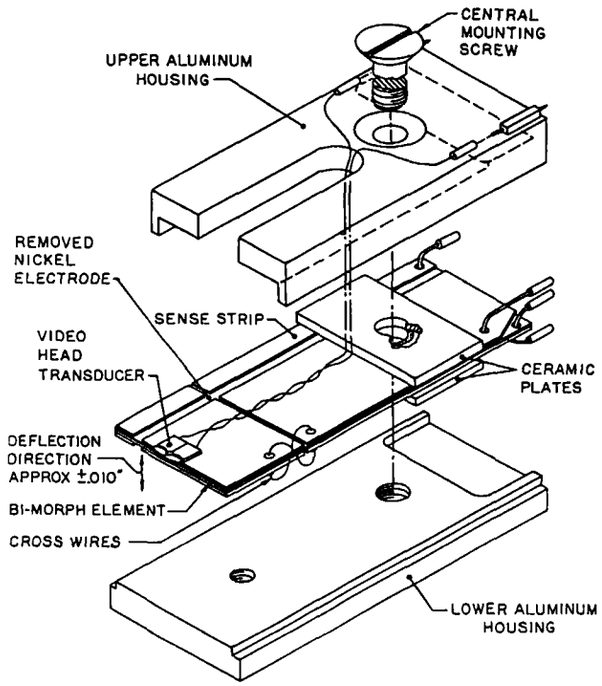

Fig. 2. Ampex AST video playback head.

rangement ensures that these mounting criteria are satisfied. An additional constraint is that the interface of the ceramic plates and the bi-morph at the bend line has to be firm and continuous; otherwise the bending of the bi-morph will be nonuniform, which would cause a tilt in the head transducer and create azimuth errors during playback.

A portion of the bi-morph projects beyond the backside of the ceramic plates and allows for the attachment of the various wires. It was found during early development that this short section of cantilevered bi-morph element resonated at its natural frequency during excitation of the head transducer end of the element. That particular problem was solved by encapsulating that short section in epoxy.

Because the head transducer enters and leaves the tape once per revolution during the vertical interval, a variable strain is induced in the bi-morph element in a direction perpendicular to the intended deflection. If this strain is severe it can cause time base errors relative to the head-to-tape speed. An aspect ratio of length to width of the bi-morph element of at least 2:1 eliminates the problem.

In slow motion applications, for example one-fifth speed, the bi-morph element must undergo deflection to five different positions within a total range of approximately ±0.010 in (±0.254 mm) from nominal in order to play the prerecorded video track the required five times. If the element is mounted in a simple cantilever configuration and voltage is applied it will bend as a pure segment of a circle. Considering that the head transducer is rigidly secured to the tip of the element, it will be inclined to the tape at various angles depending on the degree of deflection. This deflection is shown as angle $\propto$ in Fig. 3a and is commonly referred to as "zenith error." This subject is discussed in Ref. 4. In short wave length recordings, typical of video recording, this will cause a separation loss, which has an undesirable effect on video performance. Note the nonuniformity of the RF envelope during the five sequential plays of the tracks. A unique solution to this problem was found by removing a narrow strip of the nickel electrode across the transducer on both sides of the bi-morph element. This essentially creates two independent bi-morph elements within a single structure. By cross wiring these elements, and repolarizing, voltage applied to the terminals will create curvilinear bending of one section of the element in one direction while the other section bends in the opposite direction. The results are shown in Fig. 3b, where it can be seen that no "zenith error" occurs ($\propto = 0°$), and the RF envelope amplitude is uniform during all five sequential plays of the tracks.

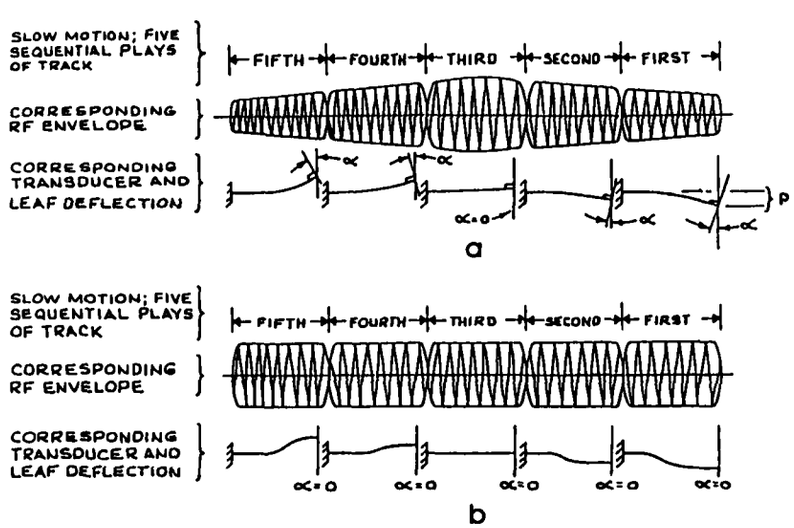

Fig. 3. Illustration of "zenith error." It occurs in Fig. 3a, and it has been eliminated in Fig. 3b.

Overall Tracking System

The auto scan tracking system in the VPR Series of videotape recorders consists of a programmable reproduce video head controlled by a closed loop electronic servo. A deflection range of over several video tracks enables the servo to fully compensate for tape speed tracking errors in slow motion and still frame. If the video signal is processed through a companion wide window digital time-base corrector, fully corrected broadcast quality video at various reproduce speeds is available.

A basic block diagram of the system is shown in Fig. 4. The system senses tracking errors by detecting variations in the reproduce RF envelope. Any tracking variations are detected, amplified, and processed in order to be used for repositioning the reproduce head back to track center.

Dampening System

Since the reproduce head motion is accomplished by a cantilever mounted piezoceramic flexure element, a means of dampening the cantilever mode resonance had to be developed.

Pure mechanical dampening through the use of "dead" rubber can be effective but was not used for several reasons, First of all, the rubber dampening pieces in contact with the deflector significantly reduced the deflection sensitivity of the element due to the extra force required to expand and compress the rubber. In addition, maintaining the proper position of the rubber pieces in the 1000 *g* environment of the rotating scanner would require an elaborate and bulky mounting system. Since the piezoceramic effect is bi-directional, it was de-

cided to take advantage of this fact by reserving a small area of the element called a sense strip, to be used in the generator mode for feedback purposes. This allows an electrical sample of the transducer motion to be fed back into the driver system in order to provide electromechanical dampening without the disadvantage of reduced sensitivity. A block diagram of the driver/dampening system is shown in Fig. 5. Since the multimode resonances of the bimorph are part of the loop response, special filtering and compensation had to be developed in order to obtain satisfactory performance.

In order for it to exhibit the piezoelectric effect, piezoceramic material must first be polarized with an electric field. This polarization can be lost under certain excitation conditions. Therefore, with this consideration in mind, the circuits used to drive the element were designed to insure that maximum available deflection is obtained without the danger of depolarizing the element. The depolarizing problem is circumvented by means of a unique driving system which never applies a voltage having polarity opposite the original polarizing field, yet the capability of bidirectional mechanical motion is preserved.

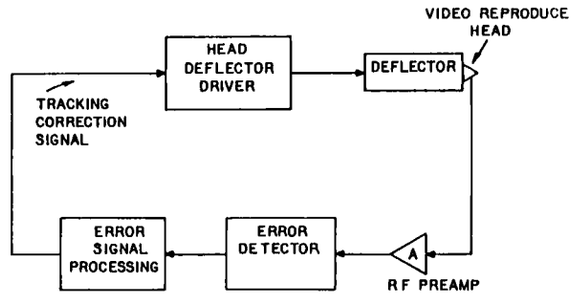

Fig. 4. Block diagram of AST servo system.

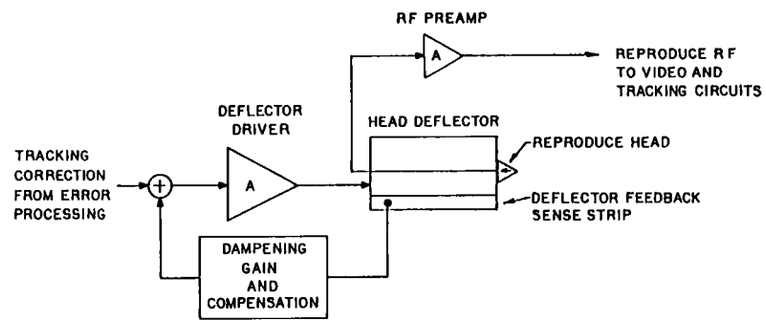

Fig. 5. Block diagram of AST head deflector/dampening system.

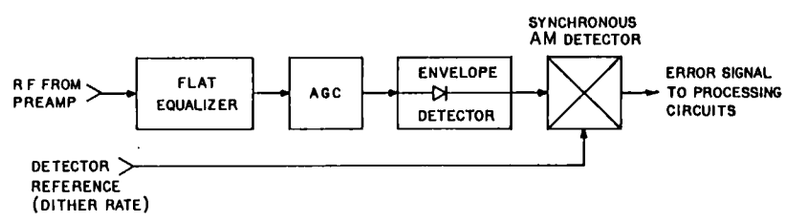

Fig. 6. Block diagram of AST servo error detector.

Error Detection

Because the tracking system must be able to handle dynamic or nonlinear tracking errors, it was necessary to develop a rapidly responding, closed-loop servo system. The initial step was to develop a method of generating the tracking servo error. Obviously, the tracking system cannot depend on an auxiliary servo track or bits because this would involve format changes. Also, standard control track information cannot provide dynamic tracking error information. The clear choice is to derive the error signal from the playback video head itself.

If the detected RF envelope were used as a tracking error signal, a decrease in the RF level would allow the servo to sense when mistracking was occurring. However, the servo could not determine in which direction it must react in order to correct the error.

Directional information may be obtained by various methods. One approach involves a multiple head scheme whereby the RF output from two auxiliary track edge sensing heads is compared and servo-controlled to a balance. The disadvantages of using such a scheme, which requires three tightly spaced heads, are obvious. One method that retains the simplicity of a single head system, yet allows the determination of error amplitude and phase, is the dither approach. This involves intentionally deflecting the reproduce head a small amount in each direction from track center in a sinusoidal manner (dithering), in order to create a carrier amplitude modulation of known frequency and phase. The RF signal is then passed through an envelope detector followed by a synchronous AM detector (Fig. 6). Since the reference for the synchronous detector is the same signal as the one used to dither the head, the synchronous detector, which is sensitive to both polarity and magnitude, will yield both servo amplitude and direction.

In order to reduce problems associated with spurious components in the detected error signal, the dither rate must be slightly greater than twice the highest correction rate of the servo system. With these considerations in mind, the selected dither frequency is 425 Hz for 625-line systems and 450 Hz for the 525-line standard. The magnitude is such that it creates about 10% RF amplitude modulation. This low level modulation due to the dithering reproduce head produces AM sidebands on the FM picture carrier. These AM sidebands in the reproduce RF signal are prevented from reaching the FM demodulator by means of the action of the limiter circuit preceding the demodulator. Extensive tests were conducted to insure that the reproduce video signal is not degraded when the tracking system is operating.

Since the tracking error detection process involves carrier amplitude demodulation, precautions must be taken to insure that spurious carrier AM from the video signal is eliminated before the reproduce RF is applied to the servo detectors. Unwanted carrier amplitude variations are minimized by a two-step process (Fig. 6). First the reproduce RF from the preamp is applied to a "flat" equalizer to remove any instantaneous envelope variations. Long term changes (tape variations, etc.) are handled by an automatic gain control (AGC) circuit.

Error Processing

Due to the application of the tracking servo system, the error signal processing system, which converts the previously described tracking error signal into an appropriate tracking correction signal, reflects some unique departures from traditional VTR servo technology. Basically, the error signal processing system must generate three correction signals. First a static or dc signal is required to produce continuous deflection of the video head whenever there is an elevation difference between the reproduce head and the video track on tape. For instance, the record confidence mode requires the video reproduce head to be statically deflected approximately 1/3 of a track pitch in order to be centered on the track being recorded. This capability is

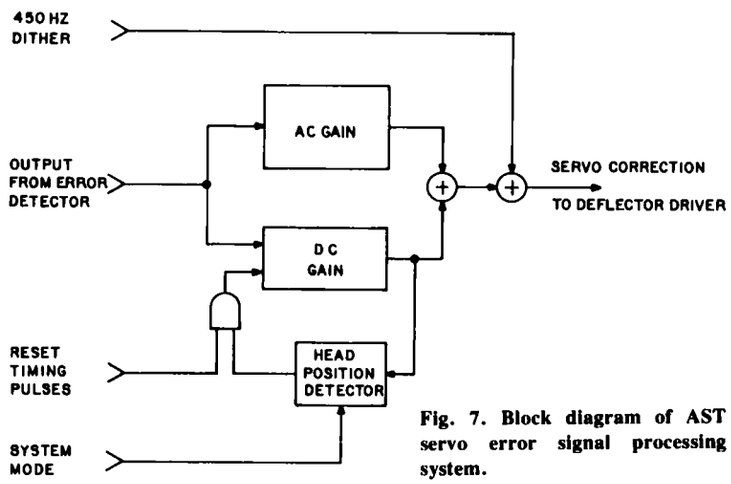

Fig. 7. Block diagram of AST servo error signal processing system.

provided by dc gain circuits compensated in a conventional manner. In addition, the error signal must be processed to generate an ac correction for dynamic tracking errors and a variable sawtooth wave for slow motion and still frame geometry correction.

Processing of the detected error signal is outlined in the block diagram shown in Fig. 7. The output from the error detector is fed to both the dc and ac gain sections. In the dc section the low frequency static correction waveform and the slow motion geometric correction waveform are generated to compensate tracking for tape speed error. The system is self determining. In other words, the correction waveform is determined by the closed loop action of the servo itself. This is accomplished by monitoring the head control (elevation) voltage via the head position detector and then deciding, with the aid of logic circuitry, whether during the next vertical blanking interval the head should: stay on the present track (repeat TV field), go on to the next track, or (as required for reverse) go back two tracks. This approach was found to be more effective and simpler to implement than one based on other velocity inputs (such as a tachometer) for determining the required correction.

Servo response at dynamic error frequencies (scanner rotational rate and its harmonics) is obtained by a parallel path ac gain section as shown in the block diagram (Fig. 7). Here the error signal is selectively amplified in order to maximize the servo response at 60, 120, and 180 Hz. These are the frequencies at which any dynamic tracking errors will occur. Since the error repeats with every scanner revolution, the advantage of this type of a system is a matched filter response enhancing servo gain and noise immunity, and the provision of the capability to correct for dynamic tracking errors. A simple processing circuit might have been used, but Ampex chose to use a comb filter type of processing, to avoid compromising performance (the capability to correct high frequency errors).

After the error signal has been properly filtered and amplified, the proper amount of dither deflection is added. This composite waveform is then applied to the input of the deflector driver completing the servo loop.

Summary

The auto scan tracking (AST) system described here when applied to a broadcast quality helical scan videotape recorder provides a feature that previously was not available in a single record and playback machine. Previously, if the user required a video recorder and a slow motion facility, two separate pieces of equipment were necessary. The slow motion facility was usually in the form of a disk recorder with limited record capability, generally less than a minute. Now, however, a recorder equipped with AST provides up to 90 min of potential slow motion capability that can be quickly accessed at any time.

References

1. Dennis M. Ryan, "Mechanical Design Considerations for Helical-Scan Videotape Recorders," *SMPTE J.*, *87*: 767–771, Nov. 1978. Previously published in unedited form in *One-Inch Helical Video Recording*, SMPTE, 1978.
2. Frederick M. Remley, "An Overview of One-Inch Helical Video Recording," in *One-Inch Helical Video Recording*, SMPTE, 1978.